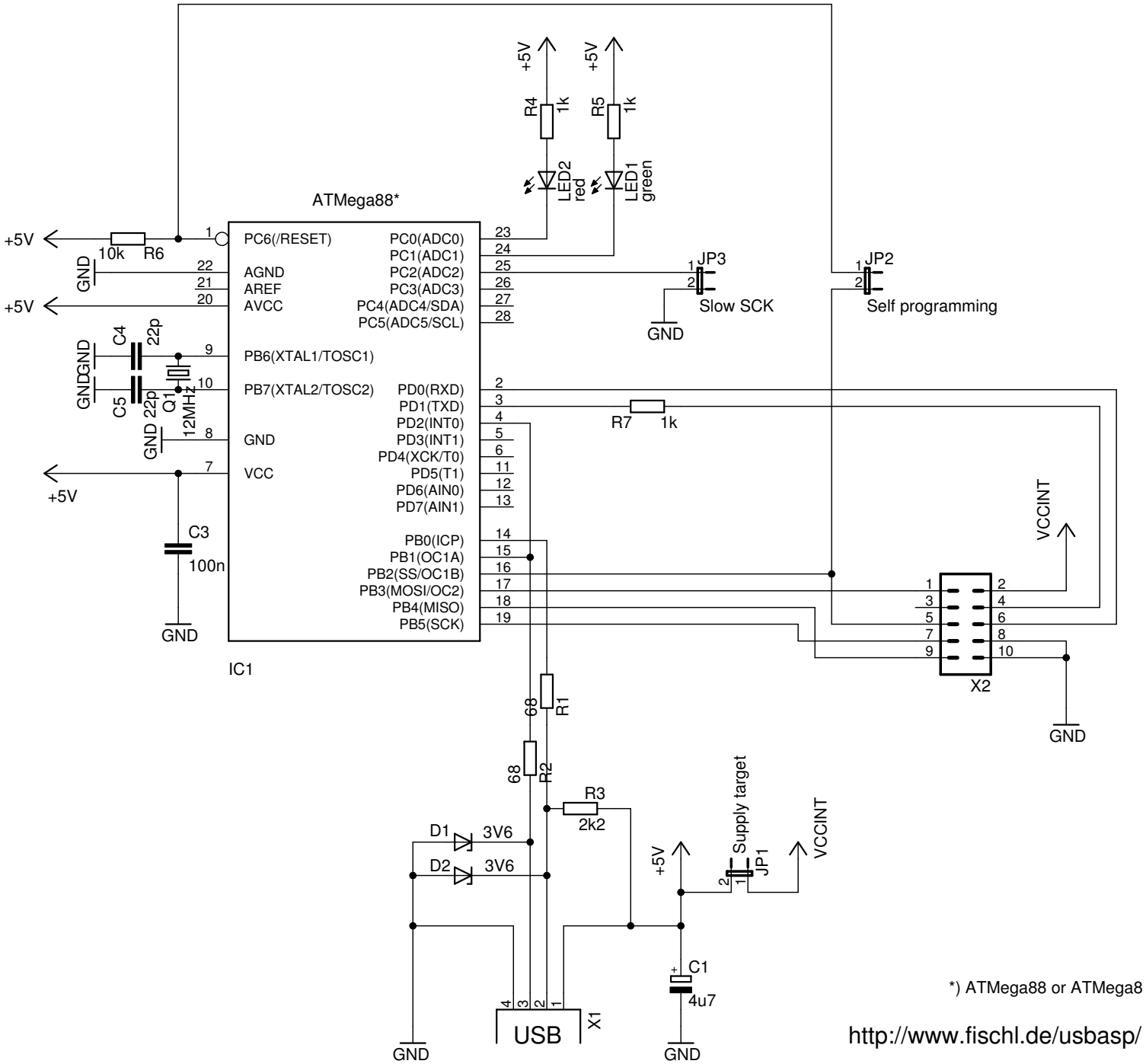
ATMega88*
PC6(/RESET)
AGND
AREF
AVCC
PB6(XTAL1/TOSC1)
PB7(XTAL2/TOSC2)
GND
VCC
PC0(ADC0)
PC1(ADC1)
PC2(ADC2)
PC3(ADC3)
PC4(ADC4/SDA)
PC5(ADC5/SCL)
PD0(RXD)
PD1(TXD)
PD2(INT0)
PD3(INT1)
PD4(XCK/T0)
PD5(T1)
PD6(AIN0)
PD7(AIN1)
PB0(ICP)
PB1(OC1A)
PB2(SS/OC1B)
PB3(MOSI/OC2)
PB4(MISO)
PB5(SCK)
IC1
+5V
GND
R6
10k
C4
22p
C5
22p
Q1
12MHz
C3
100n
R4
1k
R5
1k
LED2
red
LED1
green
JP3
Slow SCK
JP2
Self programming
R7
1k
VCCINT
X2
R1
68
R2
68
R3
2k2
D1
3V6
D2
3V6
Supply target
JP1
C1
4u7
USB
X1
*) ATMega88 or ATMega8
http://www.fischl.de/usbasp/